Acme Sanitary Ware Co. Ltd.
1/F, Acme Building, 22-28 Nanking Street, Kowloon, Hong Kong
Tel: 2388 7171 Fax: 2710 8012
Email: acme@acmesanitary.com.hk
Website: www.acmesanitary.com.hk
Since 1949

WDI SMART WATER

PROJECT		REF		REV	ITEM CODE	
LOCATION		DATE			PAGE	

SANITARY WARE SPECIFICATION SHEET

Item Descriptions	WDI (PRC) Plastic open front seat	Illustration/ Drawing
Dimensions	L410 x 364 x H55 mm	
Model	I2070	
Colour	White	
Material	Plastic	
Manufacturer	WDI (PRC)	
Source	Acme Sanitary Ware Co. Ltd Mr. Eric Wong/ Mr. Wilson Hung	
Contact Tel/Fax E-mail Website	(852) 2388-7171 / (852) 2710-8012 acme@acmesanitary.com.hk www.acmesanitary.com.hk	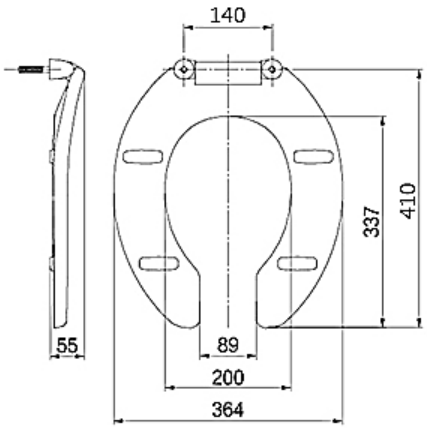

Note:

** All information of the above is for the reference only. No prior notice is made if any changes.*